# Stable table bases since 1947.



POHL

stays stable.

We build and supply
table bases for
the hospitality industry.
We have been around since
1947 and manufacturing
in Wels for just as long.

Sanja Gaspar and Christian Gruber, Management





## Orbit
Stable yet mobile
*Page 11*



## Crest
Stable on
uneven surfaces
*Page 21*



## Flat
Stable heavy duty
*Page 27*



## Special
Height adjustable
Folding
*Page 19, 33*

## Colorful
Pohl in color
*Page 34*

## Proven
What customers say
*Page 36*



Sanja Gaspar and Christian Gruber, Management

We build top-quality table bases with designs as timeless as they are practical. And everything we build is made to last forever. That's why we are used to the fact that many customers only ever buy from us once. They use our table bases for generations in the hospitality industry.

We guarantee decades of reliable supply and aftersales service. How? We manufacture every table base ourselves. And do not depend on suppliers.

# Stable for generations
# *table bases.*

## 1947
Otto Pohl establishes the company. In the early days, Pohl produces fashion jewelry. Like countless others, he manufactures a type of jewelry his contemporaries call “Gablonzer.”

## 1966
Friedrich Gruber, Otto Pohl’s son-in-law, joins the company. A breath of fresh air for the business, he kicks off the production of ironware components: fittings for the furniture industry.

## 1968
We build the first bases for tables and bar stools. This is the birth of Pohl as we know it today.

## 1986 + 1988
Pohl continues to grow and stays in family ownership: Christian and Peter Gruber join the family business. Christian Gruber continues to be part of operations today.

## 1993
Plant 2 in Steinhaus near Wels goes on line. It helps us meet growing demand. We continue to add facilities. The company is flourishing.

## Today
We are modernizing and expanding production facilities. Our machinery does us proud. And the order situation proves us right.

# Our plans, our production, our know-how – all from a single source.



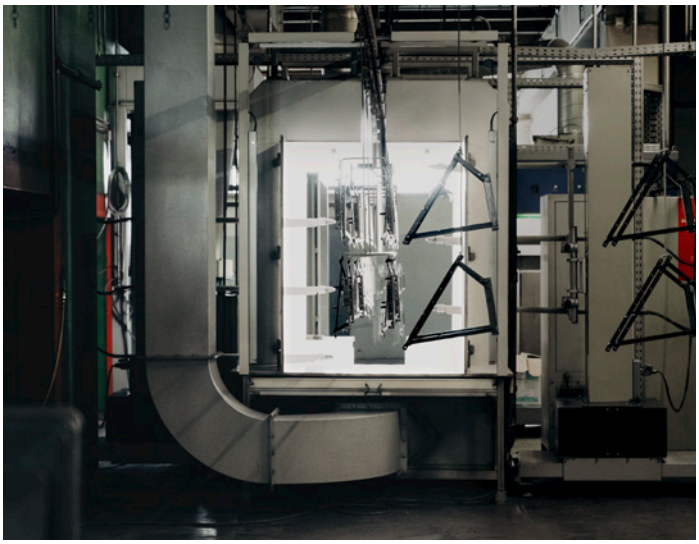

If it says Pohl outside, the inside will be Austrian quality – down to the last detail. We rely on our own tooling department and state-of-the-art production technologies. Because we prize absolute precision. To reliably get the quality we want, we produce it ourselves. That puts us in a position where we can guarantee decades of supply and after-sales services.

# Stable quality *standards.*



Everything from a single source - or from the many hands in our production team.

With us, you get full in-house production depth from a single source, from raw materials to the final product. We do not outsource a single production step. We do surface finishing and powder coating in-house. That allows us to offer countless colors and a perfect finish. And our tool shop efficiently accommodates customer needs and customization requests.

Modern machinery – from welding robots to laser cutters – ensures optimized processing for every material, size, and function. This single-source approach saves time and assures quality at all levels. From very small batches to large orders, our production team is equipped to take on any task.

We know how to build table bases.
And we know what's important: That your table bases are where you need them when you need them. And in perfect quality.





# Stable delivery *service.*

## Ready mounted

We deliver on time, as agreed – without delays or excuses. Our word of honor. What's more, we save you time and energy right when it matters: We deliver assembled tables.*

We deliver tables with the bases assembled.
*Why?*
– So you don't have to account for assembly in your scheduling.
– So we can guarantee absolute quality, down to the last screw.
Others call it a 'win-win.' We call it *stable delivery service* – and a matter of honor.

## 44 designs, countless colors

We are a reliable partner for the hospitality industry and, of course, for everyone who wants to design spaces for the hospitality industry. Our 44 different designs give you absolute creative freedom. We offer choices and options: We produce table bases in any color – endless possibilities.

## Supply and after-sales reliability

We guarantee decades of supply reliability. It's a promise we can make because we manufacture all table bases ourselves. We do not dependent on suppliers.

## Everything and more

We love creative processes. We are happy to develop the perfect individual solution for you. Thanks to our flexibility and lean structures, we can get you a prototype or pilot series in just a few days.



**The ready mounted service is only valid for Austria and southern Germany.*




100s
500s
5000s

**Perfect for**
any situation where you move tables more frequently, for example, to put them away after closing time.

# Orbit
# *Light but stable*



There's more to the relaxed elegance of the Orbit series' raised base plate than meets the eye. The raised plate is not just beautiful, but adds stability to the base. Not to forget, *Orbit* table bases weigh just half as much as the *Flat* series' bases.



# TG- 160

| | |
|---|---|
| Height | 700 mm |
| Base plate | Ø 550 mm |
| Pedestal | Ø 76 mm |
| for table tops up to | Ø 800 mm |
| Weight | 16 kg |

Felt pads *included*
Available in stainless steel

Illustrated example *RAL 1019 Grey beige*, powder coating*



# TG- 162

| | |
|---|---|
| Height | 700 mm |
| Base plate | Ø 390 mm |
| Pedestal | Ø 76 mm |
| for table tops up to | Ø 600 mm |
| Weight | 10 kg |

Felt pads *included*
Available in stainless steel

Illustrated example *Stainless steel**



# TG- 165

| | |
|---|---|
| Height | 700 mm |
| Base plate | Ø 750 mm |
| Pedestal | Ø 100 mm |
| for table tops up to | Ø 1000 mm |
| Weight | 30 kg |

Felt pads *included*
Available in stainless steel

Illustrated example *TIGER Drylac© 89/10960 | GS/GL, powder coating*

**Coatings & colors are available in all RAL colors, custom coatings upon request*



# TG- 170

| | |
|---|---|
| Height | 700 mm |
| Base plate | 1000 x 500 mm |
| Pedestal | Ø 76 mm |
| for table tops up to | 1200 x 800 mm |
| Weight | 28 kg |

Felt pads *included*
Available in stainless steel

● Illustrated example *RAL 9005 Jet black*, powder coating*



# TG- 173

| | |
|---|---|
| Height | 700 mm |
| Base plate | Ø 750 mm |
| Pedestal | Ø 76 mm |
| for table tops up to | Ø 1400 mm |
| Weight | 30.5 kg |

Felt pads *included*
Available in stainless steel

● Illustrated example *RAL 1013 Oyster white*, powder coating*

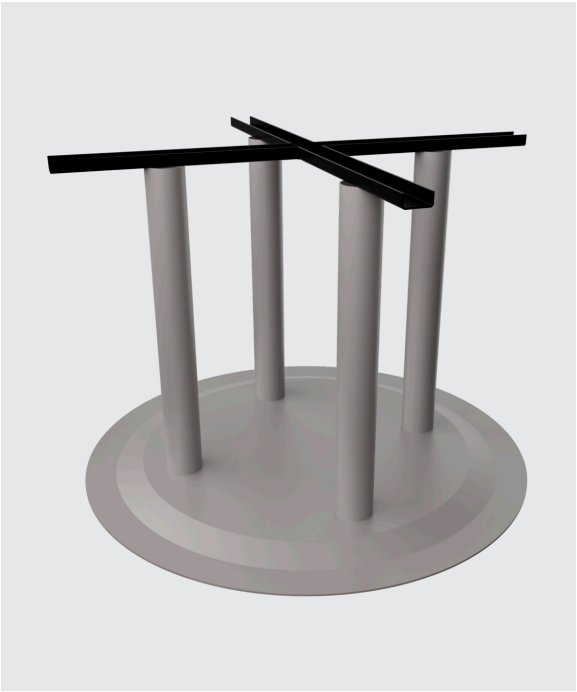

# TG- 175

| | |
|---|---|
| Height | 700 mm |
| Base plate | Ø 980 mm |
| Pedestal | Ø 76 mm |
| for table tops up to | Ø 1800 mm |
| Weight | 55 kg |

Felt pads *included*
Available in stainless steel

● Illustrated example *RAL 7036 Platinum grey*, powder coating*



# TG- 181

| | |
|---|---|
| Height | 1070 mm |
| Base plate | Ø 550 mm |
| Pedestal | Ø 76 mm |
| for table tops up to | Ø 700 mm |
| Weight | 19 kg |

Felt pads *included*
Available in stainless steel

● Illustrated example *RAL 9005 Jet black*, powder coating*



# TG- 191

| | |
|---|---|
| Height | 1070 mm |
| Base plate | Ø 550 mm |
| Pedestal | Ø 76 mm |
| Footrest | 460 x 25 mm |
| for table tops up to | Ø 700 mm |
| Weight | 21 kg |

Felt pads *included*
Not available in stainless steel

● Illustrated example *RAL 7036 Platinum grey*, powder coating*



# TG- 500

| | |
|---|---|
| Height | 700 mm |
| Base plate | 400 x 400 mm |
| Pedestal | 60 x 60 mm |
| for table tops up to | 600 x 600 mm |
| Weight | 11.5 kg |

Felt pads *included*
Available in stainless steel

● Illustrated example *Deorre 621*
*TIGER Drylac© 68/15155 | ME/GL | B*, powder coating*

**Coatings & colors are available in all RAL colors, custom coatings upon request*



# TG- 510

| | |
|---|---|
| Height | 700 mm |
| Base plate | 500 x 500 mm |
| Pedestal | 70 x 70 mm |
| for table tops up to | 800 x 800 mm |
| Weight | 18 kg |

Felt pads *included*
Available in stainless steel

● Illustrated example *RAL 9005 Jet black*, powder coating*



# TG- 513

| | |
|---|---|
| Height | 700 mm |
| Base plate | 750 x 500 mm |
| Pedestal | 70 x 70 mm |
| for table tops up to | 900 x 700 mm |
| Weight | 23 kg |

Felt pads *included*
Available in stainless steel

● Illustrated example *RAL 2004 Pure orange*, powder coating*



# TG- 515

| | |
|---|---|
| Height | 700 mm |
| Base plate | 625 x 625 mm |
| Pedestal | 70 x 70 mm |
| for table tops up to | 1000 x 1000 mm |
| Weight | 30.5 kg |

Felt pads *included*
Available in stainless steel

● Illustrated example *Stainless steel**



# TG- 530

| | |
|---|---|
| Height | 700 mm |
| Base plate | 1000 x 500 mm |
| Pedestal | 70 x 70 mm |
| for table tops up to | 1200 x 800 mm |
| Weight | 30 kg |

Felt pads *included*
Available in stainless steel

● Illustrated example *Marrone 3605*
*TIGER Drylac© 68/60812 | ME/MA | A*, powder coating*



# TG- 535

| | |
|---|---|
| Height | 700 mm |
| Base plate | 1000 x 625 mm |
| Pedestal | 70 x 70 mm |
| for table tops up to | 1400 x 1000 mm |
| Weight | 43 kg |

Felt pads *included*
Available in stainless steel

● Illustrated example *RAL 9005 Jet black*, powder coating*



# TG- 536

| | |
|---|---|
| Height | 700 mm |
| Base plate | 1250 x 625 mm |
| Pedestal | 80 x 80 mm |
| for table tops up to | 1600 x 1000 mm |
| Weight | 48 kg |

Felt pads *included*
Available in stainless steel

◍ Illustrated example *Stainless steel**

**Coatings & colors are available in all RAL colors, custom coatings upon request*



# TG- 5170

| | |
|---|---|
| Height | 1070 mm |
| Base plate | 500 x 500 mm |
| Pedestal | 70 x 70 mm |
| for table tops up to | 700 x 700 mm |
| Weight | 17 kg |

Felt pads *included*
Available in stainless steel

Illustrated example *RAL 7036 Platinum grey*, powder coating*



# TG- 5175

| | |
|---|---|
| Height | 1070 mm |
| Base plate | 500 x 500 mm |
| Pedestal | 70 x 70 mm |
| Footrest | 500 x 500 x 25 mm |
| for table tops up to | 700 x 700 mm |
| Weight | 19 kg |

Felt pads *included*
Available in stainless steel

Illustrated example *RAL 8011 Nut brown*, powder coating*



# TG- 5375

| | |
|---|---|
| Height | 1070 mm |
| Base plate | 1000 x 500 mm |
| Pedestal | 70 x 70 mm |
| Footrest | 1000 x 500 x 25 mm |
| for table tops up to | 1200 x 700mm |
| Weight | 35.4 kg |

Felt pads *included*
Available in stainless steel

Illustrated example *RAL 9005 Jet black*, powder coating*

*Pohlstabil* does not mean making do without convenience features. Many of our table bases are height adjustable.

**We offer different mechanisms**
Pneumatic spring
Hand crank



# TG- 710

| | |
|---|---|
| Height | 700 - 1070 mm |
| Base plate | Ø 550 mm |
| Pedestal | Ø 95 mm |
| for table tops up to | Ø 700 mm |
| Weight | 21 kg |

Felt pads *included*
Not available in stainless steel

● Illustrated example *RAL 9005 Jet black*, powder coating*

# Height adjustable
# *Controlled flexibility*






# 200s

**Perfect for**
all indoor guest spaces with uneven ground and alfresco guest spaces on cobblestone.

# Crest
## *Round or square, always with an edge*



Not every guest room was built for this very purpose. Wherever history or circumstance makes other table bases a shaky proposition, the Crest series is *pohlstabil* and the firm choice.

All Crest table bases come with adjustable feet specifically designed to level out uneven surfaces.



# TG- 200

| | |
|---|---|
| Height | 700 mm |
| Base plate | 400 x 400 mm |
| Pedestal | 60 x 60 mm |
| for table tops up to | 600 x 600 mm |
| Weight | 11 kg |

Adjustable feet *included*
Not available in stainless steel

Illustrated example *RAL 3013 Tomato red*, powder coating*



# TG- 205

| | |
|---|---|
| Height | 700 mm |
| Base plate | 480 x 480 mm |
| Pedestal | 70 x 70 mm |
| for table tops up to | 800 x 800 mm |
| Weight | 13 kg |

Adjustable feet *included*
Not available in stainless steel

Illustrated example *RAL 9005 Jet black*, powder coating*



# TG- 210

| | |
|---|---|
| Height | 700 mm |
| Base plate | 600 x 600 mm |
| Pedestal | 70 x 70 mm |
| for table tops up to | 1000 x 1000 mm |
| Weight | 25.5 kg |

Adjustable feet *included*
Not available in stainless steel

Illustrated example *RAL 7036 Platinum grey*, powder coating*

**Coatings & colors are available in all RAL colors, custom coatings upon request*



# TG- 215

| | |
|---|---|
| Height | 700 mm |
| Base plate | 700 x 700 mm |
| Pedestal | 80 x 80 mm |
| for table tops up to | 1100 x 1100 mm |
| Weight | 27.5 kg |

Adjustable feet *included*
Not available in stainless steel

Illustrated example *RAL 7036 Platinum grey*, powder coating*



# TG- 230

| | |
|---|---|
| Height | 700 mm |
| Base plate | 730 x 480 mm |
| Pedestal | 70 x 70 mm |
| for table tops up to | 900 x 700 mm |
| Weight | 18 kg |

Adjustable feet *included*
Not available in stainless steel

Illustrated example *RAL 3004 Purple red*, powder coating*



# TG- 255

| | |
|---|---|
| Height | 700 mm |
| Base plate | 950 x 480 mm |
| Pedestal | 70 x 70 mm |
| for table tops up to | 1300 x 800 mm |
| Weight | 25 kg |

Adjustable feet *included*
Not available in stainless steel

Illustrated example *RAL 7036 Platinum grey*, powder coating*



# TG- 260

| | |
|---|---|
| Height | 700 mm |
| Base plate | 1080 x 480 mm |
| Pedestal | 70 x 70 mm |
| for table tops up to | 1400 x 800 mm |
| Weight | 26 kg |

Adjustable feet *included*
Not available in stainless steel

Illustrated example *RAL 5010 Gentian blue*, powder coating*



# TG- 265

| | |
|---|---|
| Height | 700 mm |
| Base plate | 1230 x 480 mm |
| Pedestal | 70 x 70 mm |
| for table tops up to | 1600 x 800 mm |
| Weight | 27 kg |

Adjustable feet *included*
Not available in stainless steel

Illustrated example *RAL 9005 Jet black*, powder coating*

**Coatings & colors are available in all RAL colors, custom coatings upon request*



# TG- 280

| | |
|---|---|
| Height | 700 mm |
| Base plate | 1200 x 600 mm |
| Pedestal | 70 x 70 mm |
| for table tops up to | 1600 x 1000 mm |
| Weight | 35 kg |

Adjustable feet *included*
Not available in stainless steel

Illustrated example *RAL 6034 Pastel turquoise*, powder coating*



# TG- 285

| | |
|---|---|
| Height | 700 mm |
| Base plate | 1400 x 700 mm |
| Pedestal | 80 x 80 mm |
| for table tops up to | 2000 x 1200 mm |
| Weight | 55 kg |

Adjustable feet *included*
Not available in stainless steel

Illustrated example *RAL 9005 Jet black*, powder coating*




# 8000s

**Perfect for**
all spaces where tables rarely move. Maximum stability meets maximum weight.

# Flat
## *Stable to even more stable*



With its unobtrusive elegance, the Flat series cuts a fine figure. With its understated clean lines, this base scores with steadfast inner values: It is our heaviest series. Unwavering. Unshakeable. *Pohlstabil*, that's what it is.



# TG- 8010

| | |
|---|---|
| Height | 700 mm |
| Base plate | Ø 390 mm |
| Pedestal | Ø 76 mm |
| for table tops up to | Ø 600 mm |
| Weight | 13 kg |

Felt pads *for indoor use included*
PVC gliders *for alfresco spaces included*
Available in stainless steel

● Illustrated example *RAL 9005 Jet black*, powder coating*



# TG- 8020

| | |
|---|---|
| Height | 700 mm |
| Base plate | Ø 480 mm |
| Pedestal | Ø 76 mm |
| for table tops up to | Ø 800 mm |
| Weight | 17 kg |

Felt pads *for indoor use included*
PVC gliders *for alfresco spaces included*
Available in stainless steel

● Illustrated example *RAL 7036 Platinum grey*, powder coating*



# TG- 8030

| | |
|---|---|
| Height | 700 mm |
| Base plate | Ø 700 mm |
| Pedestal | Ø 100 mm |
| for table tops up to | Ø 1000 mm |
| Weight | 38 kg |

Felt pads *for indoor use included*
PVC gliders *for alfresco spaces included*
Available in stainless steel

● Illustrated example *Stainless steel**

**Coatings & colors are available in all RAL colors, custom coatings upon request*



# TG- 8181

| | |
|---|---|
| Height | 1070 mm |
| Base plate | Ø 480 mm |
| Pedestal | Ø 76 mm |
| for table tops up to | Ø 700 mm |
| Weight | 13 kg |

Felt pads *for indoor use included*
PVC gliders *for alfresco spaces included*
Available in stainless steel

● Illustrated example *RAL 6003 Olive green*, powder coating*



# TG- 8291

| | |
|---|---|
| Height | 1070 mm |
| Base plate | Ø 480 mm |
| Pedestal | Ø 100 mm |
| Footrest | Ø 460 x 25 mm |
| for table tops up to | Ø 700 mm |
| Weight | 23 kg |

Felt pads *for indoor use included*
PVC gliders *for alfresco spaces included*
Available in stainless steel

● Illustrated example *RAL 9005 Jet black*, powder coating*



# TG- 8120

| | |
|---|---|
| Height | 700 mm |
| Base plate | 480 x 480 mm |
| Pedestal | 70 x 70 mm |
| for table tops up to | 800 x 800 mm |
| Weight | 20 kg |

Felt pads *for indoor use included*
PVC gliders *for alfresco spaces included*
Available in stainless steel

Illustrated example *RAL 6011 Reseda green*, powder coating*



# TG- 8170

| | |
|---|---|
| Height | 1070 mm |
| Base plate | 480 x 480 mm |
| Pedestal | 70 x 70 mm |
| for table tops up to | 700 x 700 mm |
| Weight | 21 kg |

Felt pads *for indoor use included*
PVC gliders *for alfresco spaces included*
Available in stainless steel

Illustrated example *RAL 7036 Platinum grey*, powder coating*

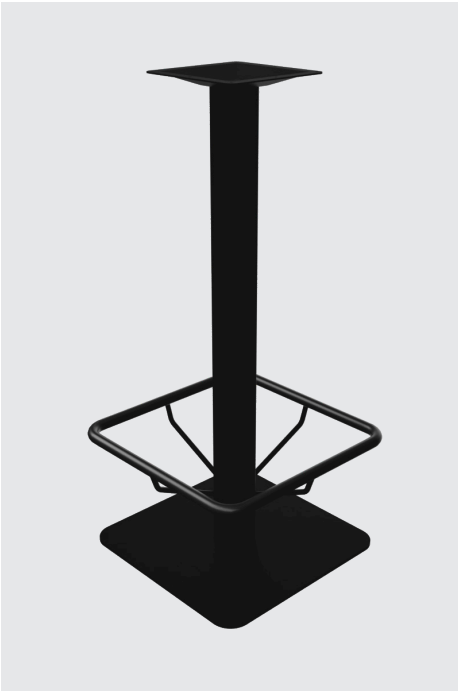

# TG- 8175

| | |
|---|---|
| Height | 1070 mm |
| Base plate | 480 x 480 mm |
| Pedestal | 70 x 70 mm |
| Footrest | 500 x 500 x 25 mm |
| for table tops up to | 700 x 700 mm |
| Weight | 23 kg |

Felt pads *for indoor use included*
PVC gliders *for alfresco spaces included*
Available in stainless steel

Illustrated example *RAL 9005 Jet black*, powder coating*

**Coatings & colors are available in all RAL colors, custom coatings upon request*



# TG- 8050

| | |
|---|---|
| Height | 700 mm |
| Base plate | 960 x 480 mm |
| Pedestal | Ø 76 mm |
| for table tops up to | 1200 x 800 mm |
| Weight | 30 kg |

Felt pads *for indoor use included*
PVC gliders *for alfresco spaces included*
Available in stainless steel

Illustrated example *Stainless steel**



# TG- 8150

| | |
|---|---|
| Height | 700 mm |
| Base plate | 960 x 480 mm |
| Pedestal | 70 x 70 mm |
| for table tops up to | 1200 x 800 mm |
| Weight | 34 kg |

Felt pads *for indoor use included*
PVC gliders *for alfresco spaces included*
Available in stainless steel

Illustrated example *Brown C-34*
*TIGER Drylac© 29/65650 | ME/MA | B, powder coating*



# TG- 8375

| | |
|---|---|
| Height | 1070 mm |
| Base plate | 960 x 480 mm |
| Pedestal | 70 x 70 mm |
| Footrest | 1000 x 500 x 25 mm |
| for table tops up to | 1200 x 700 mm |
| Weight | 46.4 kg |

Felt pads *for indoor use included*
PVC gliders *for alfresco spaces included*
Available in stainless steel

Illustrated example *RAL 7036 Platinum grey*, powder coating*

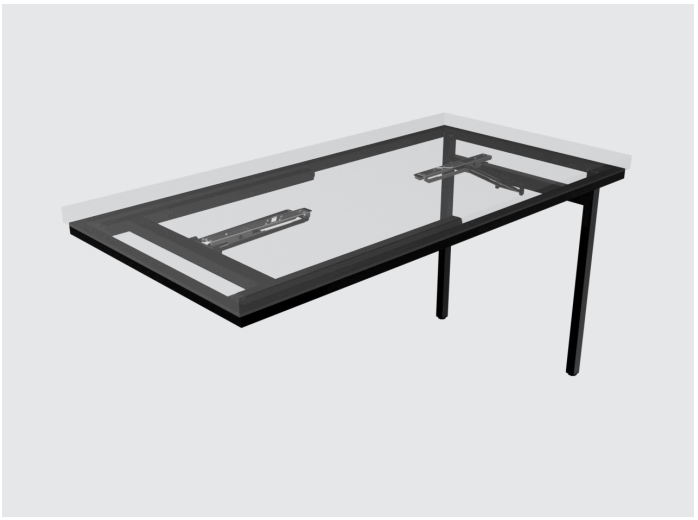

# TG- 805

| | |
|---|---|
| Height | 700 mm |
| Square tube | 30 x 30 mm |
| for table tops up to | ab 1400 x 700 mm |
| Weight | 12 kg |

Adjustable feet *included*
Not available in stainless steel

● Illustrated example *RAL 9005 Jet black*, powder coating*



# TG- 808

| | |
|---|---|
| Height | 700 mm |
| Square tube | 30 x 30 mm |
| for table tops up to | ab 900 x 700 mm |
| Weight | 8 kg |

Adjustable feet *included*
Plastic bearing *with integrated stack protection*
Not available in stainless steel

● Illustrated example *RAL 9005 Jet black*, powder coating*



# TG- 810

| | |
|---|---|
| Height | 700 mm |
| Tube | Ø 28mm |
| for table tops up to | ab 1450 x 600mm |
| Weight | 7 kg |

PVC gliders *included*
Plastic bearing *with integrated stack protection*
Not available in stainless steel

● Illustrated example *RAL 9005 Jet black*, powder coating*

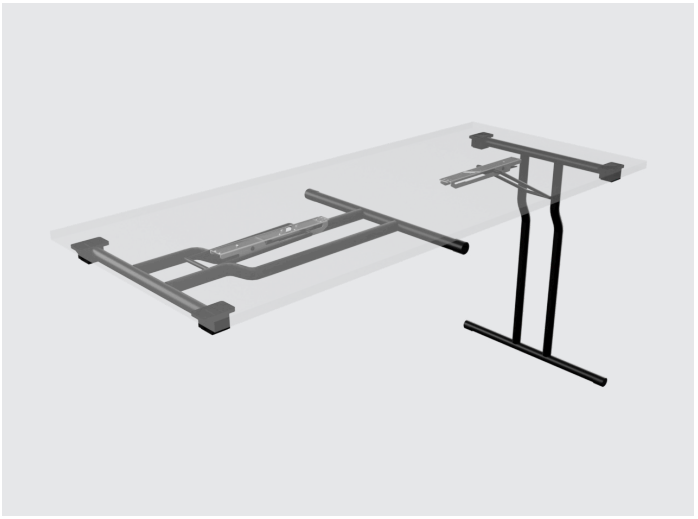

# TG- 815

| | |
|---|---|
| Height | 700 mm |
| Tube | Ø 28mm |
| for table tops up to | ab 1200 x 600 mm |
| Weight | 7 kg |

PVC gliders *included*
Plastic bearing *with integrated stack protection*
1 base *cranked*, 1 base *straight*
Not available in stainless steel

● Illustrated example *RAL 9005 Jet black*, powder coating*

# Folding
## *Not always in use, always ready to use*





**Perfect for**
tables not in daily use.
But stable and sturdy when they are.

**Versions**
Plastic bearing with integrated stack protection
Adjustable feet

Our decades of experience in manufacturing stable and sturdy table bases puts us in a position to build the best bases for folding tables. We say this with pride, with confidence, and comfortable in the knowledge that it's true.

# Stable design
## *Colors*



# Stable trend
# *Special coatings*



Sage blossom blue, raspberry jelly red, pearl opal green. No, we're not making those colors up.

They are all in the RAL color system. We can produce our metal table bases in any RAL color. The perfect choice if you want your table base to enhance the overall look of your interior design or bring in colors in a nod to your brand's color scheme.

In addition to the rich RAL color pallet, we offer an exciting range of special coatings, such as Tiger Coatings. All applied in-house, of course.

# Customers
## *Stable cooperation, stable results*





XPresso *Restaurant Bad Radkersburg*

"The products are high-quality and stable. The service is friendly, reliable, and fast. All I have to do is call Wels, and I get the answer I need in no time at all. What's more, Pohl quality is simply a credit to our company."
*Michael Dutzler, Dutzler Design*



Sporthotel Wagrain

"On the one hand, our furniture needs to meet our high design standards. On the other hand, it has to be guest-proof. Many suppliers can offer one or the other. Pohl delivers on both. And absolutely reliably."
*Thomas Berger, Sporthotel Wagrain*









We love creative processes. We are happy to develop the perfect individual solution for you. Thanks to our flexibility and lean structures, we can get you a prototype or pilot series in just a few days.



**Us, from left to right**

Rainer Wakolbinger
*develops stable table bases.*

Sanja Gaspar
*makes stable table bases.*

Stefan Sterner
*produces stable table bases.*

Belma Softic
*sells stable table bases.*

Peter Ecker
*sells stable table bases.*

Katarina Pilicic
*makes stable table bases.*

Christian Gruber
*makes stable table bases.*

Aniko Vadasz
*charges for stable table bases.*



We assume no responsibility or liability
for any errors, typographical errors,
or print mistakes in this brochure. All
images show representative examples.
*October 2023*

**Pohl & Co.**
**Metallwarenerzeugung**
**GmbH & Co. KG**

Zellerstrasse 3
4600 Wels, Austria
+43 7242 46 673
info@pohl.co.at

POHL

pohl.co.at